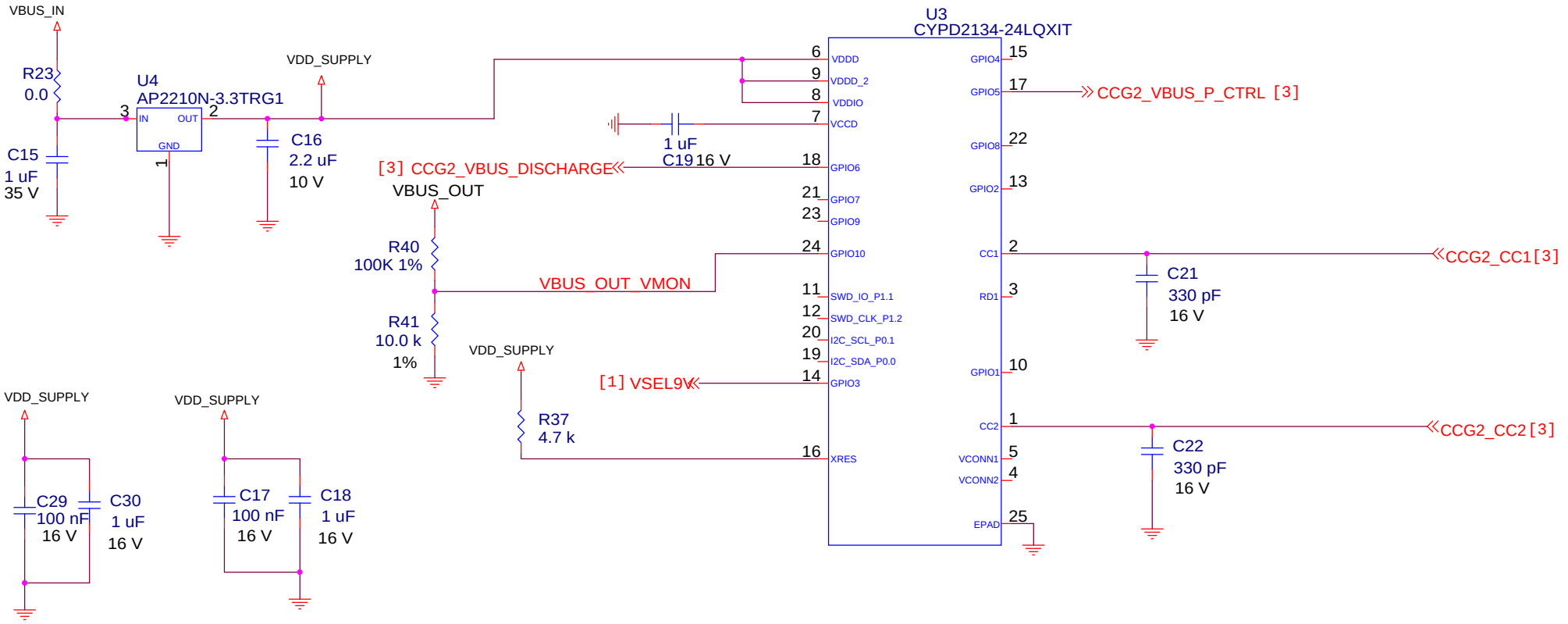

The product and applications illustrated herein (including circuits external to the product and transformer construction) may be covered by one or more U.S. and foreign patents or potentially by pending U.S. and foreign patent applications assigned to Power Intergrations. A complete list of Power Integrations' patents may be found at www.powerint.com.

Copyright 2014, Power Integrations Proprietary and Confidential

power integrations
5245 Hellyer Avenue
San Jose, CA USA 95138
http://www.powerint.com

Page Title	PAGE2
Board Title	20W USBPD DER533_revC
Size	Doc Number <Doc>
Revision	A
Date:	Monday, February 22, 2016
Sheet	1 of 1